THERMOSTAT SWITCH (NC)

KTO 111



The mechanical NC thermostat opens when the temperature rises and is used to control heaters or to switch signal transmitters when the temperature undershoots. The use of push-in terminals prevents the supply lines from coming loose.

- Tight-fitting supply lines thanks to push-in terminals
- Time saving due to tool-free connection
- Large adjustment wheel enables convenient adjustment
- Optimized air inlets
- Can be used at altitudes of up to 5000 meters

OVERVIEW TECHNICAL DATA

Device type	Thermostats
Contact type	Snap-action contact
Sensor	Thermostatic bimetal
Protection type	IP20
Casing	Plastic to UL94 V-0, light grey
AC/DC	AC;DC
Inrush current	16 A
Inrush current duration	10 s
Reference voltage ohmic	250 VAC
Reference voltage 2 ohmic	120 VAC
Switching current inductive	2 A
Reference voltage inductive maximum	250 VAC
Reference voltage 2	120 VAC
Switching current dc ohmic	1 A
Reference voltage dc ohmic	30 VDC
Minimal switching capacity	0,48 W
Reference voltage	24 V
Switching current	20 mA
Service life	>100000 cycles
Switching differential	7 K
Switching differential tolerance	± 4 K
Operating temperature	-45 °C - 80 °C
Operating humidity	≤90 % RH
Storage humidity	≤90 % RH
Storage temperature	-45 °C - 80 °C

Connection	2 push-in terminals Rigid wire cable 2.5 mm² (AWG 14) Stranded wire 1.5 mm² (AWG 16)
Design	Normally closed (NC)
Mounting	Clip for 35 mm DIN rail, EN 60715
Height	60 mm
Width	33 mm
Depth	41 mm
Weight	40 g
Note	Overvoltage category: II: up to 5000 m; III: up to 2000 m.;The controller's contact system is exposed to the effects of the environment, which can change the contact resistance. This can lead to a voltage drop and/or self-heating of the contacts. Stripped length of rigid wire cable: 8 to 12 mm. Wire end ferrules (square or trapezoidal crimped) must be used for connections with stranded wires. Length of wire end ferrule: 8 mm or 12 mm. The height of the current has an influence on the tolerance accuracy, values specified: Switching resistive load (switching inductive load).
CCC	CQC

PRODUCT VARIANTS

Article number	Setting range	Switching capacity	Switching current ohmic
11100.0-00	0 °C - 60 °C	AC 250 V: 10 (2) A; AC 120 V: 15 (2) A; DC 24-72 V: 30 W	10 A
11100.0-01	-10 °C - 50 °C	AC 250 V: 10 (2) A; AC 120 V: 15 (2) A; DC 24-72 V: 30 W	10 A
11100.0-02	20 °C - 80 °C	AC 250 V: 3 (2) A; AC 120 V: 3 (2) A; DC 24-72 V: 30 W	3 A
11100.9-00	32 °F - 140 °F	AC 250 V: 10 (2) A; AC 120 V: 15 (2) A; DC 24-72 V: 30 W	10 A
11100.9-01	14 °F - 122 °F	AC 250 V: 10 (2) A; AC 120 V: 15 (2) A; DC 24-72 V: 30 W	10 A

TECHNICAL DRAWINGS

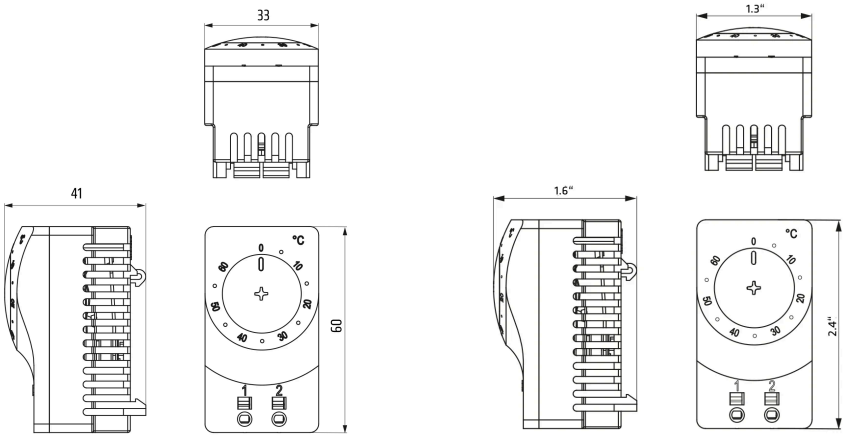

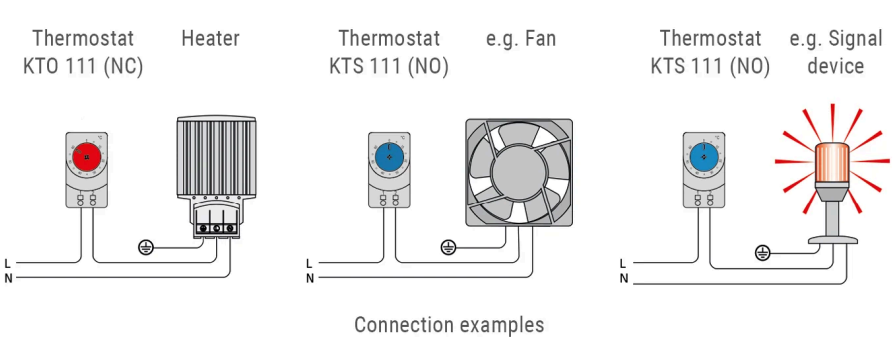

Connection examples

