PDS LOBBY CONTROL

INDEPENDENT CONTROL OF THE PRESSURE IN THE LOBBY
WITH A BUILT-IN HIGH PRECISION PRESSURE SENSOR

- CONNECTION TO A BMS SYSTEM VIA MODBUS RTU
- ACTIVATION OF THE FAIL-SAFE SYSTEM FROM THE FIRE ALARM
- MOTORISED DAMPER CONTROL
- LOCAL ACTIVATION VIA THE SMOKE SENSOR





SODECA®

PDS LOBBY CONTROL

Control panel and independent automatic regulation for lobby pressurisation systems



Control panel and independent automatic regulation for lobby pressurisation systems in accordance with standard EN 12101-6, compatible with systems KIT BOXPDS and KIT BOXPDS SMART acting as remote pressure sensor and with automatic damper control to maintain overpressure in lobbies in case of fire.

The PDS LOBBY CONTROL panel includes:

- Built-in high precision differential pressure sensor.
- LCD screen and controls for programming all functions.
- Modbus RTU connection for communications with KIT BOXPDS and KIT BOXPDS SMART, or to connect with a BMS system.
- Activation from the fire panel via a configurable potential free contact.
- OPEN/CLOSE control of two independent motorised dampers for supply and/or exhaust air.
- Control of a motorised damper that opens proportionally according to a 0-10 V DC signal to supply or exhaust air.
- Manual activation via a configurable potential free contact.
- Local activation via an autonomous analogue 4-20 mA smoke sensor.
- Casing with IP54 protection rating.
- Operating temperature range: -10 °C to +50 °C.
- Power supply: selectable between 230 V AC 50/60 Hz or 24 V DC.
- NO/NC configurable potential free relay outputs: STATUS (OK or FAULT).
- NO/NC configurable potential free relay outputs: Activation confirmation to the fire panel.

System is easily configurable via a control panel with push-buttons and LCD screen.

Technical characteristics

	Supply voltage (V)	Nominal current (A)	Pressure range (Pa)	Operating temperature (°C)	Weight (kg)	Protection class
PDS LOBBY CONTROL	230 V AC 50/60 Hz	0.6	0-2500	-10 to +50	0.9	IP54
	24 V DC	0.6	0-2500	-10 to +50	0.9	IP54

Dimensions mm

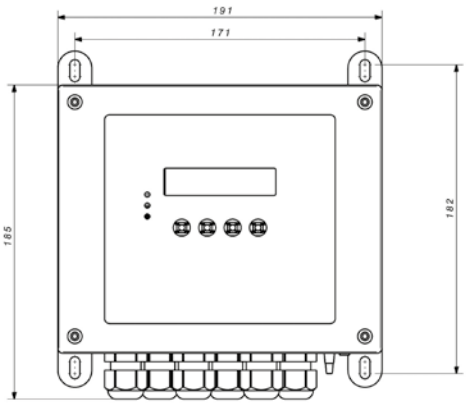

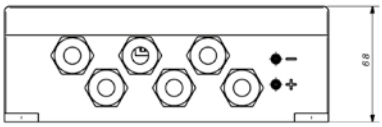

Connections

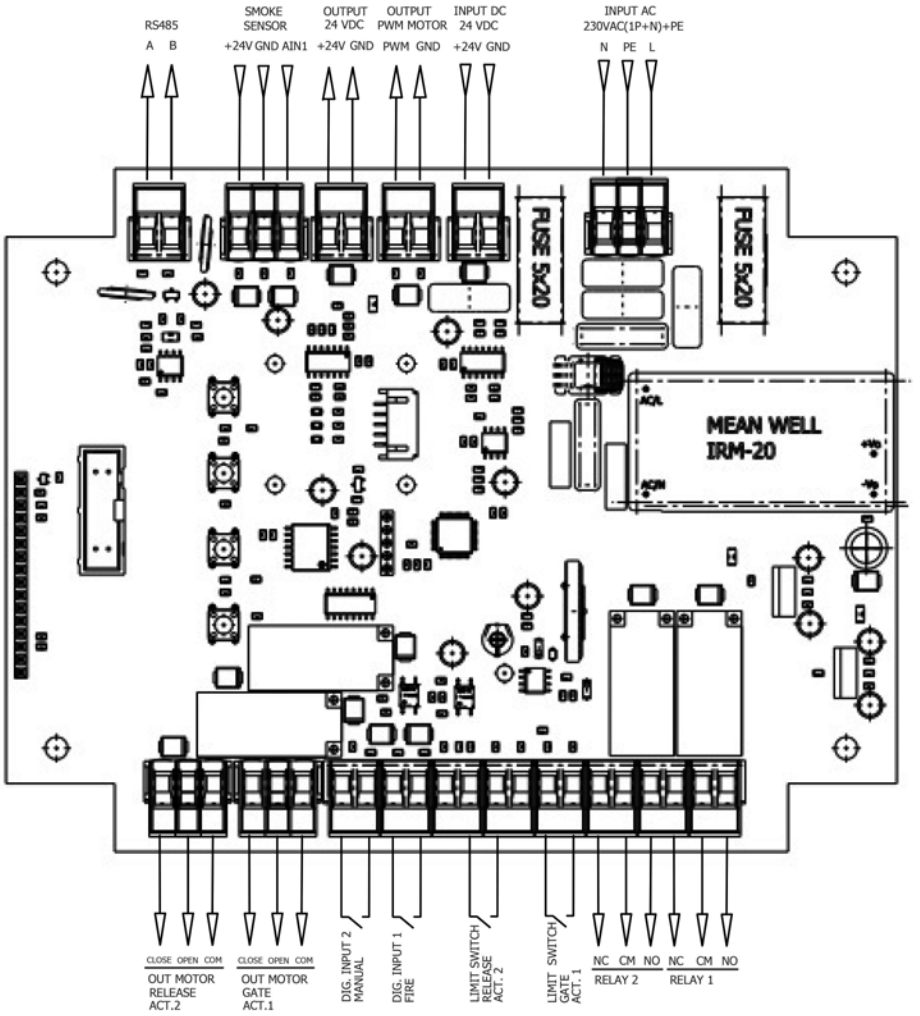

Ref. 06/2021

SODECA

HEADQUARTERS
Sodeca, S.L.U.
Pol. Ind. La Barricona
Carrer del Metall, 2
E-17500 Ripoll
Girona, SPAIN
Tel. +34 93 852 91 11
Fax +34 93 852 90 42
General sales: comercial@sodeca.com
Export sales: ventilation@sodeca.com

PRODUCTION PLANT
Sodeca, S.L.U.
Ctra. de Berga, km 0,7
E-08580 Sant Quirze de Besora
Barcelona, SPAIN
Tel. +34 93 852 91 11
Fax +34 93 852 90 42
General sales: comercial@sodeca.com
Export sales: ventilation@sodeca.com

SODECA Group

EUROPE

FINLAND
Sodeca Finland, Oy

HUITTINEN
Sales and Warehouse
Mr. Kai Yli-Sipilä
Metsälinnankatu 26
FI-32700 Huittinen
Tel. + 358 400 320 125
orders.finland@sodeca.com

HELSINKI
Smoke Control Solutions
Mr. Antti Kontkanen
Vilppulantie 9C
FI-00700 Helsinki
Tel. +358 400 237 434
akontkanen@sodeca.com

HYVINKÄÄ
Industrial Applications
Mr. Jaakko Tomperi
Niinistönkatu 12
FI-05800 Hyvinkää
Tel. +358 451 651 333
jtomperi@sodeca.com

ITALIA
Marelli Ventilazione, S.R.L.
Viale del Lavoro, 28
37036 San Martino B.A.
(VR), ITALY
Tel. +39 045 87 80 140
vendite@sodeca.com

PORTUGAL
Sodeca Portugal, Unip. Lda.

PORTO
Rua Veloso Salgado
1120/1138
4450-801 Leça de Palmeira
Tel. +351 229 991 100
geral@sodeca.pt

LISBOA
Pq. Emp. da Granja Pav. 29
2625-607 Vialonga
Tel. +351 219 748 491
geral@sodeca.pt

ALGARVE
Rua da Alegria, 33
8200-569 Ferreiras
Tel. +351 289 092 586
geral@sodeca.pt

UNITED KINGDOM
Sodeca Fans UK, Ltd.
Mr. Mark Newcombe
Tamworth Enterprise Centre
Philip Dix House, Corporation
Street, Tamworth , B79 7DN
UNITED KINGDOM
Tel. +44 (0) 1827 216 109
sales@sodeca.co.uk

AMERICA

CHILE
Sodeca Ventiladores, SpA.
Sra. Sofía Ormazábal
Santa Bernardita 12.005
(Esquina con Puerta Sur)
Bodegas 24 a 26,
San Bernardo, Santiago, CHILE
Tel. +56 22 840 5582
ventas.chile@sodeca.com

COLOMBIA
Sodeca Latam, S.A.S.
Sra. Luisa Stella Prieto
Calle7 No. 13 A-44
Manzana 4 Lote1, Montana
Mosquera, Cundinamarca
Bogotá, COLOMBIA
Tel. +57 1 756 4213
ventascolombia@sodeca.co

PERU
Sodeca Perú, S.A.C.
Sr. Jose Luis Jiménez
C/ Mariscal Jose Luis de
Orbegoso 331. Urb. El pino.
15022 , San Luis. Lima, PERÚ
Tel. +51 1 326 24 24
Cel. +51 994671594
comercial@sodeca.pe

RUSSIA

RUSSIA
Sodeca, L.L.C.
Mr. Stanislav Alifanov
Severnoye Shosse, 10 room 201
Business Park Plaza Ramstars
140105 Ramenskoye,
Moscow region, RUSSIA
Tel. +7 495 955 90 50
alifanov@sodeca.com

ISO 9001
BUREAU VERITAS
Certification

www.sodeca.com